ENGLISH

Datasheet

RS Pro FCR, PCB Mount Right Angle Mono, Female
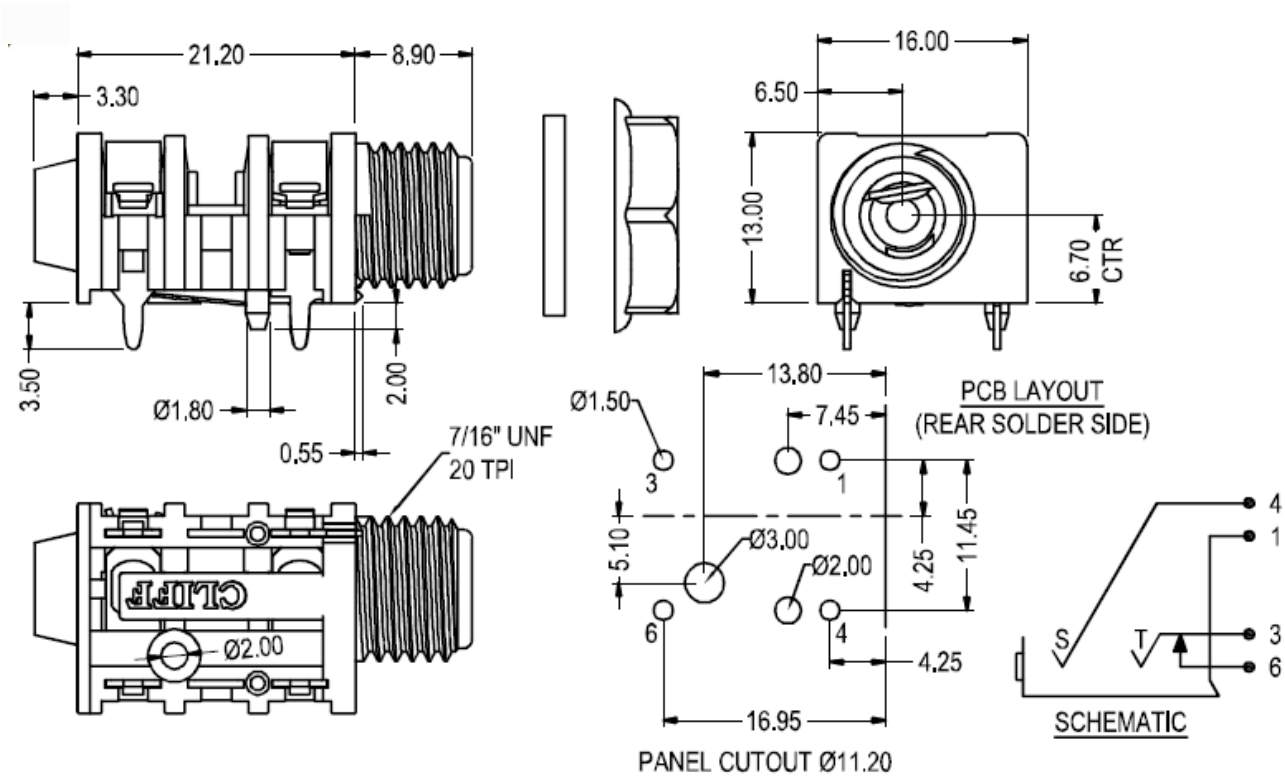
RS Stock No: 111-5768