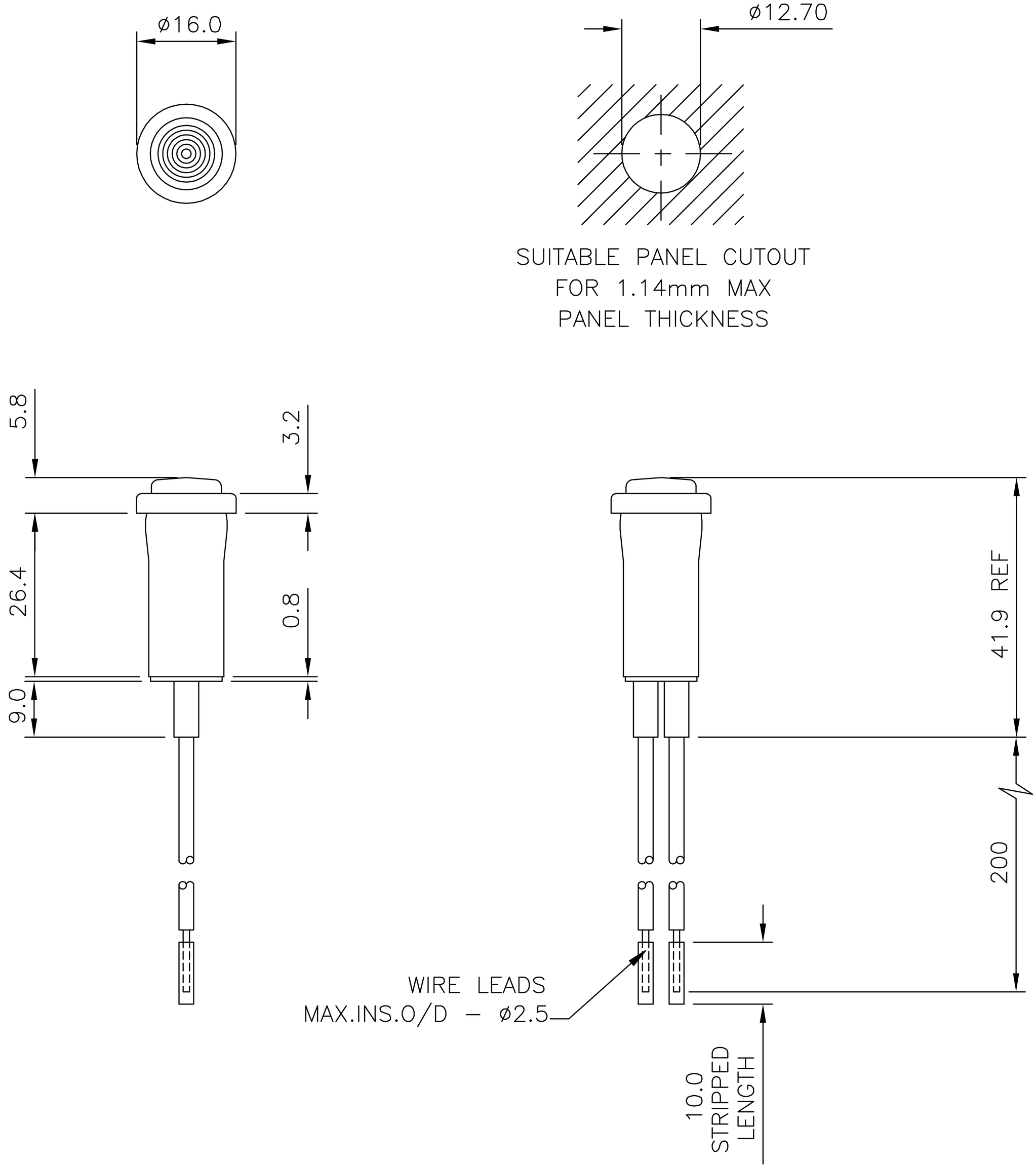

CP061/FORM-F116 ISS 4	ISSUE/CHANGE			DIMENSIONS IN MM LIMITS – LINEAR = ± 0.3 – ANGULAR = ± 1° UNLESS OTHERWISE STATED DO NOT SCALE IF IN DOUBT–ASK			DRAWN IN ACCORDANCE WITH B.S. 308 FOR TECHNICAL INFORMATION SEE CATALOGUE	Arcolectric SWITCHES PLC COPYRIGHT © RESERVED
		1	DCR6380 13.09.05	DRAWN MJC	DATE 13.09.05	CHECKED	SCALE 1 : 1	OUTLINE DRAWING FOR INDICATOR	DRAWING No L006700 A4